EDAM-5015

inLog

12-ch RTD Input Module

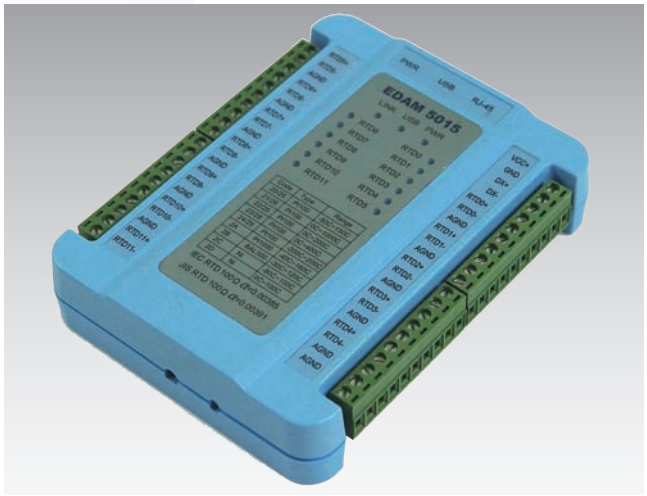

Features

- Protocol USB2.0 TCP/IP, MODBUS RTU, MODBUS TCP ASCII Command
- Support USB2.0, 10/100 Ethernet, RS485/232C, CAN(optional)
- Support PT100, PT1000, Balco 500, NI604, NI1000 RTD types
- Support isolated input channels
- Fully photo-isolation 3750Vrms
- Wide supply voltages (10~30V)
- Built-in TVS/ESD protection
- Burn-out auto detection

Specifications

Interface:

Communication	USB2.0, 10/100 Ethernet, RS485/232C, CAN(optional)
Protocol	TCP, UDP, DHCP, ARP, MODBUS RTU, MODBUS TCP ASCII Command
LED indication	LED for Power ,USB and Ethernet link status
Isolation voltage	3000VDC

Analog Input :

Effective resolution	16-bit
Input channels	12 channel RTD input (2-wires,3-wires,4-wires)
Input type	PT100,PT1000,Balco 500,NI RTD
Input range	PT100 (-50~150°C/0~100°C, 0~200°C,0~400°C,-200~200°C) Pt1000 (-40~160°C) Balco 500 (-30°C ~ 120°C) Ni604 (-80~100°C) Ni1000 (-0°C~100°C)
Isolation voltage	2000V
Sampling rate	10 Samples / Second
Input Impedance	10MΩ
Accuracy	±0.05% or better
Zero drift	±20uV/ °C
Span drift	25 ppm/ °C
CMRR	50/60 Hz: 150 dB
NMR	50/60 Hz: 100 dB
Burn-out	Wire burn-out auto detection
Over voltage protection	±60V

Power requirement :

Consumption	1.5 W/Typical, 2W/max
Power input	USB powered (400mA max.) or external unregulated +10 ~ +30 VDC
Humidity	5 ~ 95% RH, non-condensing
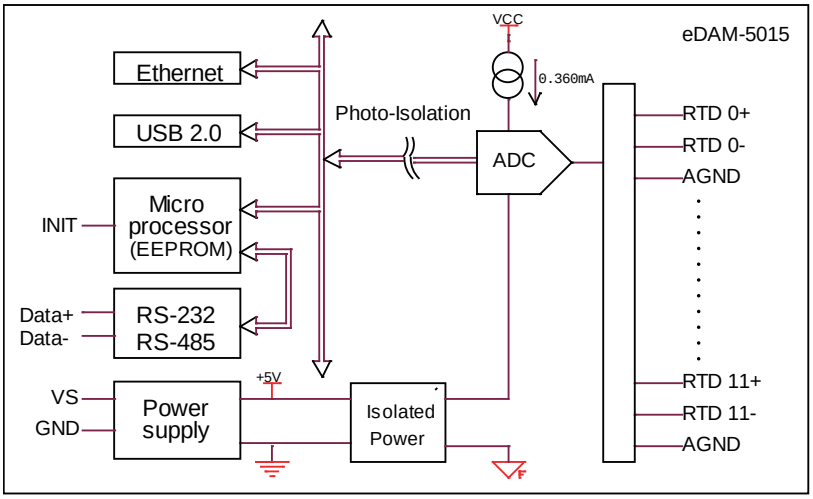
Block daigram