EDAM-9017

Ethernet-based 8-ch isolated analong input module

Features

- Support protocol Modbus/TCP,TCP/IP,UDP,ICMP,ARP
- Provides two digital outputs(open collector)
- Ethernet 10/100 Based-T communication
- Support isolated input channels
- Support ±V,±mV,mA analog input
- Fully photo-isolation 3750Vrms
- Built-in TVS/ESD protection
- Wide supply voltage(10~30V)

Specifications

Interface:

Communication	10/100 Based-T Ethernet
Protocol	Modbus/TCP, TCP/IP, UDP, ICMP and ARP
LED indication	LED for power and Ethernet link status
Isolation voltage	3000VDC

Accuracy	±0.05% or better
Zero drift	±20uV/ °C
Span drift	25 ppm/ °C
CMRR	50/60 Hz: 92 dB
Over voltage protection	±60V

Analog input:

Effective resolution	16-bit
Input channels	8 differential
Input type	mV, V, mA
Input range	±150 mV, ±500 mV, 0-5 V, ±10 V, 0-20 mA, 4-20 mA
Isolation voltage	2500Vrms
Fault and overvoltage protection	Withstands overvoltage up to ±35 V
Sampling rate	10 samples/sec
Input Impedance	20MΩ
Bandwidth	13.1 Hz / 50 Hz, 15.72 Hz / 60 Hz

Digital Output :

Channels	2
Sink type	Open collector to 50V, 500mA (maximum load)
Power dissipation	300mW max. for each module

Power requirement :

Consumption	2.2W
Power input	10~30VDC (unregulated)
Humidity	5 ~ 95% RH, non-condensing
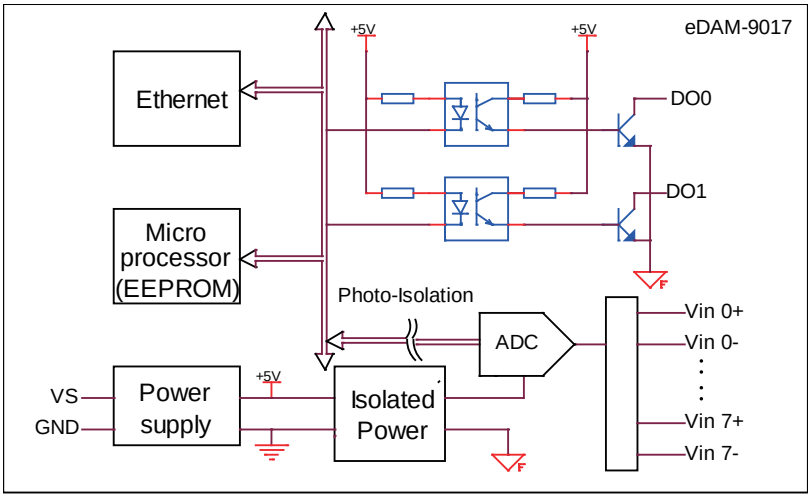
Block daigram